ISSN 2395-1621

Design Development Analysis of Compact Self-Locking Lifting Device by Application of Twin Worm Arrangement

#1A. A. Pandharabale, #2Asst. Prof. A. J. Rajguru

1aniketaki007@gmail.com
2rajgurutoo@gmail.com

#12Department of Mechanical Engineering, SPPU, Pune
M.E. (Design) Mechanical Engineering Department, SAOE, Kondhwa, 411048

ABSTRACT

a The main objective of this paper is to design a mathematical model of dual worm system for optimal load lifting capacity, optimal factor of safety and optimal efficiency for reduced power consumption. We will derive the optimal power for individual motor and select the motor for the application so as to make the device compact. We will develop the mathematical model of system of forces, derivation and resolution of system forces by drawing free body diagram of linkage, determination of forces and utilizing system of forces to determine the linkage dimensions of following parts: Worm shaft, RH worm, LH worm, Lifter Drum, Lifter Drum Shaft, and Motor mounting bracket system. We will do the 3-D modeling by Unigraphix Nx-8.0, CAE of critical components and meshing by using ANSYS. Validation will be done by using ANSYS and by Experimental validation using test-rig developed.

Keywords- a ***Efficiency, Self-locking, Worm gear***

ARTICLE INFO

Article History

Received :18th November 2015

Received in revised form :

19th November 2015

Accepted : 21st November , 2015

Published online :

22nd November 2015

I. INTRODUCTION

A worm drive is a gear arrangement in which a worm (which is a gear in the form of a screw) meshes with a worm gear (which is similar in appearance to a spur gear, and is also called a worm wheel). Like other gear arrangements, a worm drive can reduce rotational speed or allow higher torque to be transmitted [1]. When self-locking of gears is desired, two worms, one with left-hand thread and the other with right-hand thread, are associated so that the tangent of the pitch angle of the worm threads on the driving worm is less than the sum of the coefficient of friction between the two worm threads and the coefficient of friction of the driving worm bearing as reflected at the worm threads. If the pitch angle of the driven worm is made larger than permitted by the above requirement, ordinary self-locking will result. If the pitch angle of the driven worm is made too large, the efficiency of the worm drive will drop [2].

The term self locking as applied to gear systems denotes a drive which gives the input gear the freedom to rotate the output gear in either directions but the output gear locks with input when an outside torque attempts to rotate the output in either direction. This characteristic is often sought after by designers who want to be sure that the loads on the output side of the system cannot affect the position of the gears. Worm gears are one of the few gear systems that can be made self locking, but at the expense of efficiency, they seldom exceed 45% efficiency, when made self locking. Self-Locking worm gears have the advantage, that they can position loads, blocking any further movements.

B. Popper [2], invented a simple dual-worm gear system in which 90% efficiency in self-locking of this gear is achieved. The Twin worm drive is simply constructed. Two threaded rods, or “worm” screws, are meshed together. Each worm is

wound in a different direction and has a different pitch angle. For proper mesh, the worm axes are not parallel, but slightly skewed. (If both worms had the same pitch angle, a normal, reversible drive would result, similar to helical gears.) But by selecting proper, and different, pitch angles, the drive will exhibit either self-locking, or a combination of self-locking and deceleration locking characteristics, as desired. Deceleration-locking is a completely new property best described in this way. When the input gear decelerates (for example, when the power source is shut off, or when an outside force is applied to the output gear in a direction that tends to help the output gear), the entire transmission immediately locks up and comes to an abrupt stop, moderated only by any elastic "stretch" in the system. Almost any type of thread will work with the new drive-standard threads, 60º screw threads, Acme threads, or any arbitrary shallow-profile thread. Hence, the worms can be manufactured on standard machine-shop equipment

II. METHODOLOGY

In this work twin worm arrangement is used for compact self-locking lifting device. Various design and analysis calculation is derived and justified for safe design. Derivation of optimal power for individual motor, selection of BLDC motor for application so as to make device compact is developed. Then, Development of mathematical model of system of forces, derivation and resolution of system forces by drawing free body diagram of linkage , determination of forces and utilizing system of forces to determine the linkage dimensions of following parts is determined: Worm Shaft, RH worm, LH worm, Lifter Drum, Lifter Drum Shaft, Motor Mounting Bracket System. Mechanical design of above components using theories of failure for the selection of appropriate materials is done. The selected mechanism and machine along with the damper will be manufactured using following machines various machine tools like centre lathe, milling machine, DRO – Jig, boring machine, electrical arc welding etc.

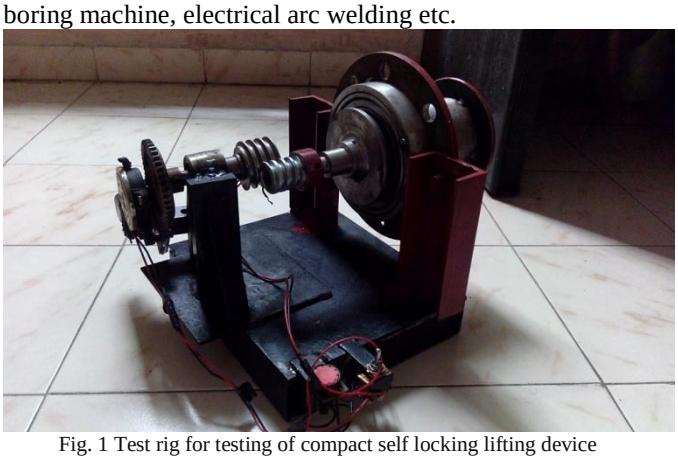

Fig. 1 Test rig for testing of compact self locking lifting device

A. Design

Design consists of application of scientific principles, technical information and imagination for development of new or improvised machine or mechanism to perform a specific function with maximum economy and efficiency. Hence a careful design approach has to be adopted. The total design work has been split up into two parts; System Design & Mechanical Design.

1. System Design

System design mainly concerns with various physical constrains, deciding basic working principle, space requirements, arrangements of various components etc. Following parameters are looked upon in system design.

- Selection of system based on physical constraints. The mechanical design has direct norms with the system design hence system is designed such that distinctions and dimensions thus obtained in mechanical design can be well fitted in to it.
- Arrangement of various components made simple to utilize every possible space.
- Ease of maintenance and servicing achieved by means of simplified layout that enables quick decision assembly of components.
- Scope of future improvement.

2. Mechanical Design

In mechanical design the components are listed down and stored on the basis of their procurement in two categories,

- Design parts.
- Parts to be purchased.

For designed parts detailed design is done and dimensions there obtained are compared to next dimensions which are already available in market. This simplifies the assembly as well as the post production and maintenance work. The various tolerances on work are specified .The process charts are prepared and passed to manufacturing stage. The parts to be purchased directly are selected from various catalogues and are specified so as to have case of procurement. In mechanical design at the first stage selection of appropriate material for the part to be designed for specific application is done. This selection is based on standard catalogues or data books; e.g.:- (PSG design data books), (SKF bearing catalogue) etc.

3. Mechanical Design

Various parts of this system are designed using following criteria.

- Selection of appropriate material.
- Assuming an appropriate dimension as per system design.
- Design check for failure of component under any possible system of forces.

Our present model is a demonstrative set up in order to show the motion and power transmission capabilities of the proposed 'twin worm system'. Transmission of power to the input shaft is done by means of motor of the following specifications.

III.DESIGN CALCULATIONS

A. Motor

Electric motor of following specification is used as the source of power in drive; 230 volt, 50Hz, 0.5 Amp, Power =50 watt (1/15HP), Speed= 0 to 9000 rpm, TEFC construction, Commutator Motor.

I. Input Torque at motor = $\frac{60\times50}{2\Pi\times400}$ =1.19N-m,

II.

III. Reduction ratio of belt drive = 5,

IV. T design = 5.96 N-m

V. *B. Design Of Input Shaft*

1. aterial Selection:

Table 1
Material Specification

Designation	Ultimate Tensile Strength	Yield Strength
20MnCr5	800 N/mm^2	680 N/mm^2

2. ASME code for design of shaft

As the loads on most shafts which are connected in the machinery are not constant, it's necessary to make proper allowance for the harmful effects of load fluctuations.

According to ASME code permissible values of shear stress may be calculated from various relations.
$fs_{max} = 0.18\ f_{ult} = 144$ N/mm^2
or
$fs_{max} = 0.3\ f_{yt} = 204$N/mm^2
Considering minimum of the above values;
$fs_{max} = 144$ N/mm^2
This is the allowable value of shear stress that can be induced in the shaft material for safe operation.

3. Design of output Shaft:
Material Selection:

Table 2
Material Specification

Designation	Ultimate Tensile Strength	Yield Strength
EN9	650 N/mm^2	480 N/mm^2

$fs_{max} = 0.18\times f_{ult} = 117$ N/mm^2 OR

$fs_{max} = 0.3\times f_{yt} = 144$ N/mm^2

Considering minimum of the above values;
$fs_{max} = 117$ N/mm^2

Shaft is provided with notch for locking; this will reduce its strength. Hence reducing above value of allowable stress by 25%.
$fs_{max} = 87.75$ N/mm^2

This is the allowable value of shear stress that can be induced in the shaft material for safe operation.
$T = 5.96 \times 10^3$ N-mm
Assuming 25% overload.
$T_{design} = 1.25 \times T = 7.46 \times 10^3$
Check for Torsional Shear Failure of Shaft:
Assuming minimum section diameter on input shaft = 16 mm.

$$T_d = \frac{\pi}{16} \times fs_{act} \times d^3.$$
$fs_{act} = 9.276$/mm^2
As, $fs_{act} < fs_{all}$; I/P shaft is safe under torsional load

C. Design (Selection) of Ball Bearing for Input Shaft:

For the selection of ball bearing, main governing factor is the system design of the drive i.e.; the size of the ball bearing is of major importance; hence here initially an appropriate ball bearing is selected by taking into consideration the convenience of mounting the planetary pins and checked the actual life of ball bearing.

Table 3
Ball Bearing Specification for Series 60

ISI No		25B C002
Bearing basic design No (SKF)		6205
D		25
D1		31
D		52
D2		46
B		15
Basic Capacity	C kgf	7100
	Co kgf	11000

$$P = X\,Fr + Y\,Fa$$
In this case; Radial load F_R = RA = 135.63N
Axial load (F_a) = 0
P x Fr =1 x 135.6 +0 =135.6

$$L = \left(\frac{C}{P}\right)^p$$

Here, p=3, for single row ball bearings;

$$L = \frac{60 \times n \times L \times h}{10^6} = 240\text{mrev}$$
C= 842.68.
As required dynamic of bearing is less than the rated dynamic capacity of bearing; hence the Bearing is safe.

D. Design (Selection) of Ball Bearing for Output Shaft

In selection of ball bearing the main governing factor is the system design of the drive i.e.; the size of the ball bearing is of major importance; hence we shall first select an appropriate ball bearing first select an appropriate ball bearing first taking into consideration convenience of mounting the planetary pins and then we shall check for the actual life of ball bearing.

Table 4
Ball Bearing Specification for Series 60

ISI No	20B C002
Bearing basic design No	6204

(SKF)		
D		20
D1		26
D		47
D2		41
B		14
Basic Capacity	C kgf	6500
	Co kgf	10000

$$P = X\,Fr + Y\,Fa$$

In our case; Radial load F_R = 100N
Axial load (F_a) = 0
P x Fr =1 x 100 +0 =100

$$L = \left(\frac{C}{P}\right)^p$$

Here, p=3, for single row ball bearings;

$$L = \frac{60 \times n \times L \times h}{10^6} = 240\text{mrev}$$

C= 464.1.
As required dynamic of bearing is less than the rated dynamic capacity of bearing; hence the Bearing is safe.

E. Design of Load Drum Hub

Load drum hub can be considered to be a hollow shaft subjected to torsional load.

Material Selection:

Table 5
Material Specification

Designation	Ultimate Tensile Strength	Yield Strength
EN9	600 N/mm^2	420 N/mm^2

As Per ASME Code;
fs_{max} = 108 N/mm^2

$$T = \frac{\pi \times fs_{act}}{16} \times \left(\frac{Do^4 - Di^4}{Do}\right)$$

fs_{act} = 1.237 N/mm^2
As, $fs_{act} < fs_{all}$, Hub is safe under torsional load

F. Design of Screw

Design Check
32.36mm,
dc = 22.36mm,
dm =19mm,

$$M_t = W \times \frac{dm}{2} \times \tan \propto$$

Where,
W= Axial load,

Helix angle:-[10]

$$\tan \propto = \frac{L}{\pi\, dm}$$

For the single start sq. thread lead is same as pitch=10

$$\tan \propto = \frac{10}{\pi \times 27.36}$$

$\propto = 6.63^0$

Friction Angle: [8]

$\mu = \tan Ø$;
$0.18 = \tan Ø$;
$Ø = 10.2^0$

Assuming that load of 800 kg is carried by the drum of 120 mm diameter, then the resultant torque,
T= 8000 x 60 = 480000N-mm = 480 x 10^3N-mm.

$$M_t = W \times \frac{27.32}{2} \times \tan(10.2 + 6.63)$$

M_t = 4.13 x W N-mm
We get, W = 116.22 KN

Material Selection:

Table 6: Material Specification for Screw [12]

Designation	Ultimate Tensile Strength	Yield Strength
20Mn Cr5	800 N/mm^2	680 N/mm^2

Direct Tensile or Compressive stress due to an axial load

$$fc_{act} = \frac{4W}{\pi \times dc^2} = 295.97\ N/mm^2$$

As $fc_{act} < fc_{all}$; Screw is safe in compression.

Torsional shear stress

$$T = M_t = \frac{\pi}{16} \times fs_{act} \times dc^3$$

$$480 \times 10^3 = \frac{\pi}{16} \times fs_{act} \times 22.36^3$$

fs_{act} = 218.67 N/mm^2
As $fs_{act} < fs_{all}$; the screw is safe in torsion.

Stresses due to buckling of screw

According to Rankine formula,

$$Wcr = \frac{Fc \times A}{\left(1 + \left(\frac{Le}{K}\right)^2\right)}$$

Where;
A = Area of c/s at root (mm^2)
K= (dc/4) (mm)
Fc= Yield stress in compression (N/mm^2)
Le = 0.5L;
As both end of screw are considered to be fixed Using PSG design data [11].

Le = 0.5x 45= 22.5mm.
Wcr = 111.045 x 10^3 N

IV. DESIGN VALIDATION BY ANSYS

a

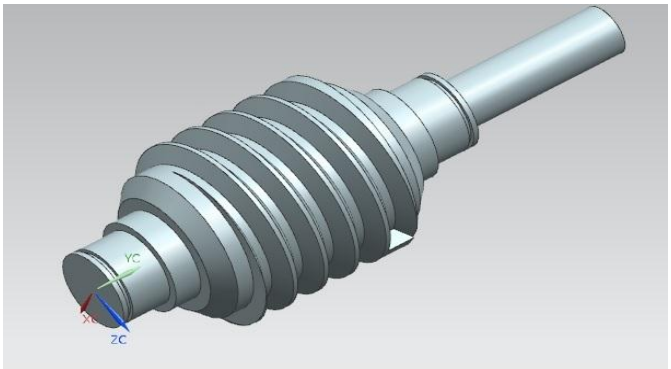

Fig.2 Modeling of worm

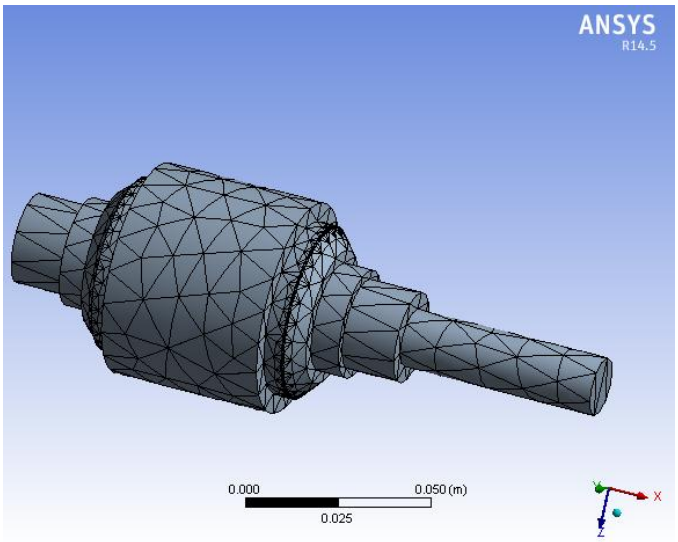

Fig. 3 Meshing of Input Worm

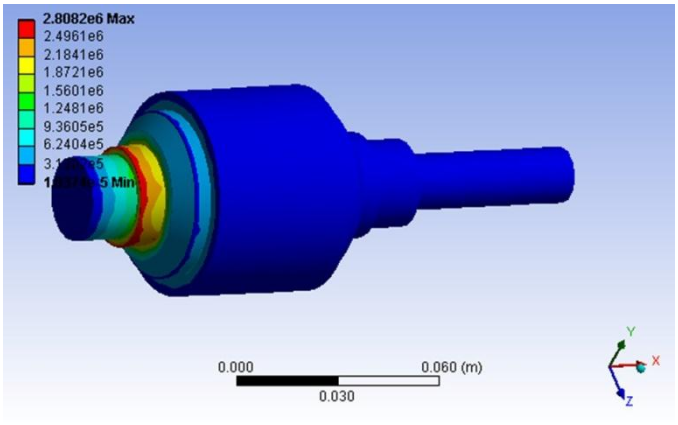

Fig.4 Von-Mises Stress in Worm

V.RESULT OF EXPERIMENTAL SETUP

The mechanism is run with constant speed to stabilize. Then the readings were taken with succession adding of 0.5 Kg weight.

Table 7
Experimental Readings

SR. NO.	Loading		Unloading		Mean Speed
	Weight (Kg)	Speed N_1(rpm)	Weight (Kg)	Speed N_2(rpm)	N (rpm)
1	0.5	43	2	45	44
2	1	44	4	42	43
3	1.5	42	6	40	41
4	2	40	8	38	39
5	2.5	33	10	35	34
6	3	29	12	27	28
7	3.5	24	14	25	23

e.g. for 3 kg load

1. Mean speed (N):-

$$N = \frac{N_1 + N_2}{2} = \frac{29 + 27}{2} = 28 \text{ rpm}$$

2. Output torque (T_{dp}):-

$$T_{dp} = \text{Weight in pan} \times \text{Radius of Dynamo Brake Pulley}$$

$$T_{dp} = (2 \times 9.81) \times 50 = 1471.5 \text{ N} \cdot \text{mm} = 1.4715 \text{ N} \cdot \text{m}$$

3. Input Power ($P_{i/p}$) = 5 watt.

4. Output Power ($P_{o/p}$):-

$$P_{o/p} = \frac{2\pi \cdot N \cdot T_{o/p}}{60}$$

$$P_{o/p} = \frac{2\pi \times 28 \times 1.4715}{60} = 4.3164 \text{ watt}$$

5. Efficiency (η):-

$$\eta = \frac{\text{Output Power}\left(P_{o/p}\right)}{\text{Input Power}\left(P_{i/p}\right)}$$

$$\eta = \frac{4.3164}{5} = 0.8632 = 86.32\%$$

Table 8

Final Result

SR NO	Load (Kg)	Speed (rpm)	Torque (N.m)	Power (watt)	Efficiency (%)
1	0.5	44	0.24525	1.130486	22.60971
2	1	43	0.4905	2.209586	44.19171
3	1.5	41	0.73575	3.160221	63.20443
4	2	39	0.981	4.008086	80.16171
5	2.5	34	1.22625	4.367786	87.35571
6	3	28	1.4715	4.3164	86.328
7	3.5	23	1.71675	4.13655	82.731

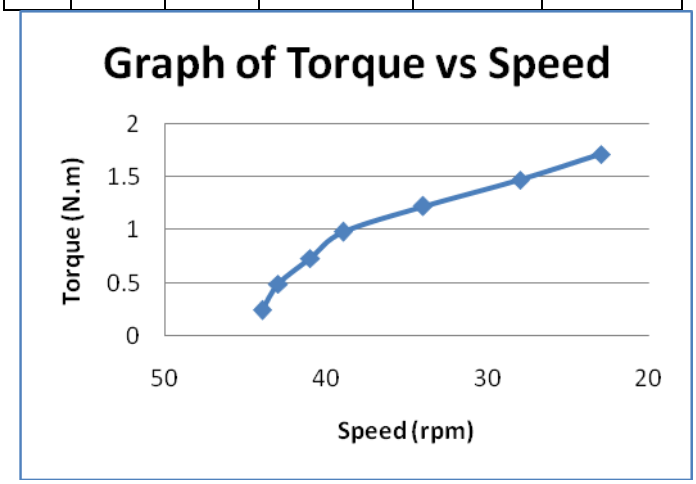

Fig. 5 Graph of Torque vs Speed

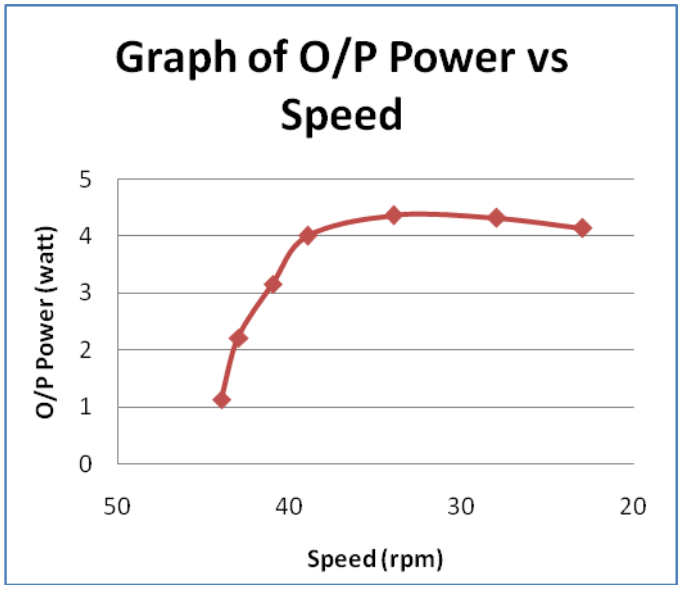

Fig. 6 Graph of O/P Power vs Speed

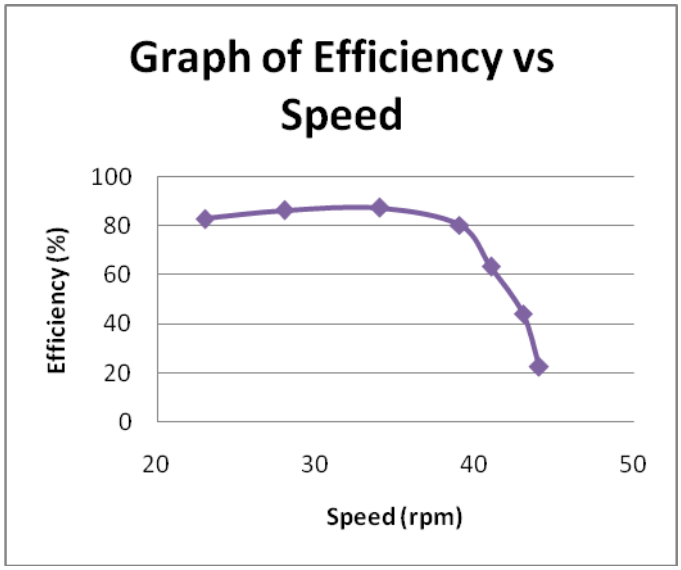

Fig. 7 Graph of Efficiency vs Speed

VI.CONCLUSION

In this work, the design of dual worm system for optimal load lifting capacity is done with, optimal factor of safety & optimal efficiency for reduced power consumption. The work includes the following steps.

I. Simulation Study

- Deflection and vibration analysis using ANSYS
- Mechanical design validation using ANSYS

II. Experimental validation:

The experimental validation part of the lifting force developed by the dual worm system is validated using test-rig. Following characteristics are plotted.

a) Torque Vs Speed
b) Power Vs speed
c) Power consumption of motor under rated load.
d) Efficiency of system Vs speed

From Fig.5, Graph shows that the torque increases with the decrease in the output speed indicating that the device will slow down slightly if the load is increased.

From Fig.6, Graph of power output indicates a rising trend up to 39 rpm of output speed and then slightly drops indicating that the operating range of the device is below 40 rpm to obtain maximum power output from the device.

From Fig.7, Graph of efficiency indicates a rising trend up to 39 rpm output speed and then slightly drops indicating that the maximum efficiency range of the device is below 4 rpm to obtain maximum efficiency from the device.

So, the efficiency of transmission for the power input of 5 watt at 3 kg load is 86.32 %, i.e. almost near to 90%.

We can increase the load lifting capacity by increasing the input power.

REFRENCES

[1] Adam Macheta and Sebastian Kania, (2009), "Energy software tools for sustainable Machine design ", pp. 1-8.

[2] J.B.Popper, K. Motzkin,"Cooperating wedges including mating worms", Patent 3343426, (Sept 26,1967).

[3] Alex Kapelevich and Elias Taye, "Applications for Self-Locking Gears", pp. 54-58.

[4] SEW Eurodrive Catalog, (2004), "Project planning for gear units", pp. 30-41.

[5] Adam Macheta and Sebastian Kania, (2009), "Energy software tools for sustainable Machine design ", pp. 1-8.

[6] Wictor. W. Panjuchin,"Self locking dual worm gear and the tools needed to produce it" US Patent 5522278, (1996).

[7] Yakov Fleytman, "Differential unit with worm gear sets", US Patent 6582338 B1, (June 24, 2003).

[8] Bryan. J. Stone, "Limited Force, Self locking tensioner",US Patent 7992706 B 2, (Aug 9, 2011).

[9] Feng. Li,"Worm Gear Drive", US Patent 8051737 B2, (Nov 8, 2011).

[10] R.S. Khurmi, J.K. Gupta, S.Chand, Textbook of Machine Design (publication) (2005), page 640, graph 17.5.

[11] PSG Design Data Pg. No. 6.8

[12] PSG Chart 1.12